Architectural Products

U905

Specimen Pass Box

Revision 1/14

JOB #:

ITEM #:

QUANTITY:

MOUNTING	HANDING	TYPE	SIZE	OTHER

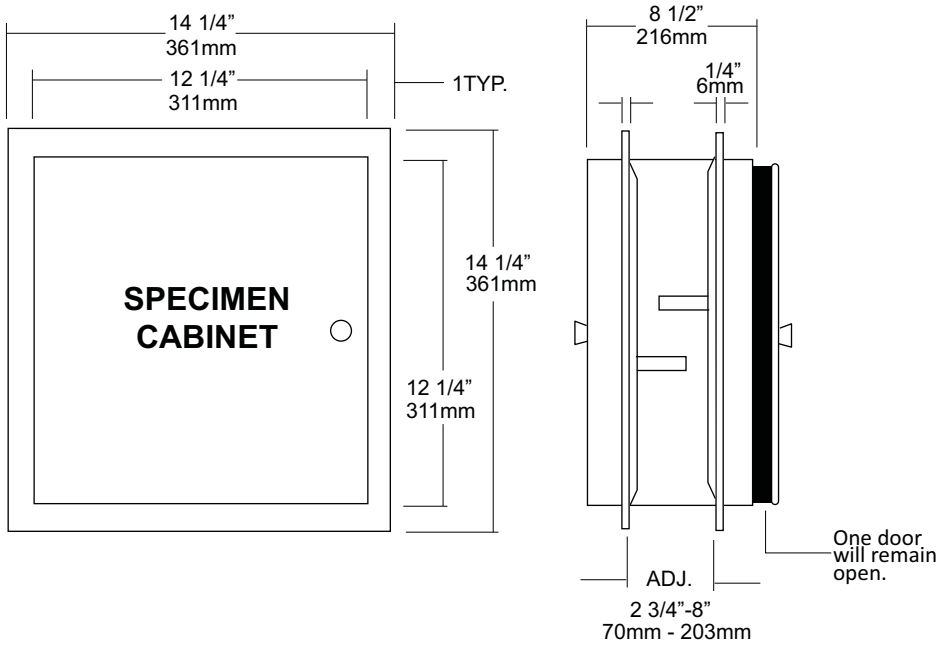

SPECIFICATIONS

Body: #18 gauge stainless steel, All exposed surfaces have a #4 satin finish. Self closing devices extends through cabinet working by a push-pull method allowing one door to open when the other door is closed. Each door is equipped with a knob for easy opening. Spillage Tray is provided with all units

Flanges: #22 gauge stainless steel with 1/4” returns, adjustable to fit openings 2 3/4” -8”D There are no visible seams or miters on face of flanges.

Hinges: Heavy duty full length stainless steel piano type.

Overall Size: 14 1/4”W x 14 1/4”H x 8 1/2”D

362mm x 362mm x 216mm

Wall Opening: 12 1/2” x 12 1/2”

318mm x 318mm

***Adjustable to fit partition openings 2 3/4” x 8”D (70mmx 210mm)**

INSTALLATION

Coordinate installation with contractor architect to avoid interference with pipes, vents, etc. Provide a rough wall opening 12 1/2”W x 12 1/2”H. Depth of wall for recessing is 2 3/4” - 8”. Remove adjustable flange from cabinet and insert into opening. Install flange back onto unit making sure both flanges are secure to wall surface. Secure cabinet from inside of unit at points indicated on drawing. After flange and cabinet are secured with proper fasteners (per each application) test door operation. One door should close while the other door opens. Place drip tray back in cabinet when doors operate.

NOTES

Formerly Model #: U905-8